[redacted]

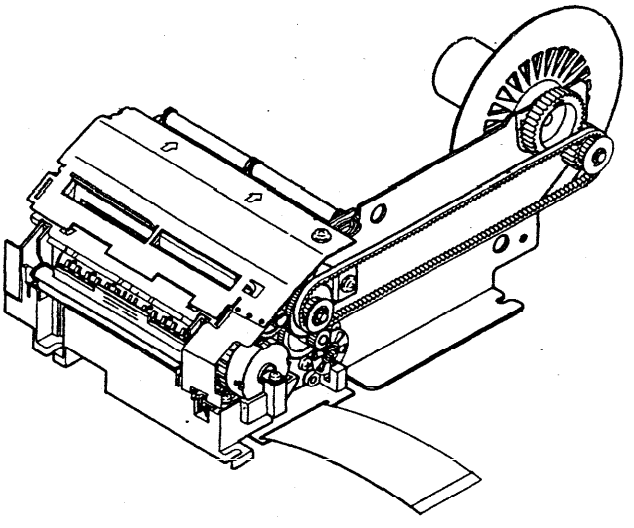

DIGITAL PRINTER

MODEL CR-750

CONTENTS

1.1 SPECIFICATIONS 1-1

1.2 OPERATING PRINCIPLES 1-2

2.1 HANDLING THE PRINTER 2-1

2.2 MAINTENANCE 2-3

2.3 APPLICATION OF LUBRICATION 2-3

2.4 TOOLS AND LUBRICANTS 2-4

2.5 REPAIR 2-5

3.1 DISASSEMBLY 3-1

3.2 ASSEMBLY 3-1

3.3 ADDJUSTMENT 3-19

■ PARTS GUIDE (FOR "KI-OB6766RCZZ")

SHARP CORPORATION

This document has been published to be used for after sales service only.
The contents are subject to change without

Click here to download the full manual at THE-CHECKOUT-TECH.COM